Spartan data network for Warfighter Physiological Status Monitoring (WPSM)

Dr. Reed Hoyt
Biophysics and Biomedical Modeling Division
MCMR-EMB
US Army Research Institute of Environmental Medicine (USARIEM)
Natick, MA 01760-5007
email: reed.hoyt@us.army.mil

SPARNET

Issue: The Ranger Training Brigade (RTB) and Weapons of Mass Destruction Civil Support Teams (CST-WMD) have unmet needs to improve real-time situational- and medical-awareness

Ranger Training Brigade (RTB) Vision

- Use network monitoring of physiology and location to minimize casualties and improve casualty management.
- With advanced networking our mission planning and risk management would be significantly aided and improved.
- The payoff is multi-faceted, student quality would be reflected with increased mission training opportunities, Cadre command and control is augmented by improved systems technologies, and casualty assessment and evacuation is exponentially shortened.

CPT Erik J. Bergeson APA-C DMO
Brigade Surgeon

Civil Support Team – Weapons of Mass Destruction (CST-WMD)

MEDICAL MONITORING TELEMETRY SYSTEM

Proactive medical monitoring can decrease serious injuries and loss of operational strength/readiness by tracking changes and trends in vital signs/core temperatures and taking action before they become symptomatic and result in a medical emergency/"man-down" scenario.

SPARNET Vision

- **Develop transparent edge networks to support (a) on-body and immediate area-of-care data communication and (b) local mesh network squad-area data communication**

- **Use SPARNET technologies to knit sensors, algorithms, and interface technologies into innovative situational- and medical-awareness products for dismounted Warriors**

AHLTA-Mobile

WPSM

SPARNET Guiding Principles

- Minimalism
  - Focus requirements to minimize risk/cost
- Flexibility and Adaptability
  - Open, easily-modified, “white box” technologies
  - Reduces need for micromanagement
  - Facilitates response to specialized needs
- Focus on dismounted Warfighter requirements
  - Establish close partnerships

Multidisciplinary “triple helix” approach

Government (Army)

- Program leadership: USARIEM, TATRC
- Expertise: CERDEC (MANET, RF safety), NSRDEC (textile prototype), USARIEM (WPSM, biomedical models)
- Regulatory and Safety oversight: Army Spectrum Manager, MRMC HRPO, CHPPM
- Contracting: USAMRAA (SBIR/STTR, supplemental funding, MIPR)

Small business

- Engineering leadership and expertise: Elintrix.com
  - Software defined radios (RF and inductive networks)
  - Situational Awareness application
  - Data base application

Academia

- Wearable antenna design: Ohio State Univ. ElectroScience Laboratory
- Power efficient radio and network operation: Univ. of California San Diego
- Metabolic Algorithms: Rice University

What is SPARNET?

- A integrated multi-element data-acquisition, analysis and display system for monitoring dismounted soldiers in mobile environments.
  - Body-worn sensors (GPS, hydration, etc.)
  - Body-worn Personal Area Network (PAN)
  - Squad-Area-Network (SAN)
  - Backhaul bi-directional communication links
  - Software applications for: instructor, Tactical Operations Center (TOC) and medics
  - Database - storage for future access/analysis

What Will SPARNET "Do"?

- Capture, preprocess, communicate, display and archive data such as:
  - Geo-location, velocity of movement, body-orientation, medical status (thermal/work strain, hydration status, vital signs, etc.)
- Integrate other system resources
  - Weather, soldier weight and load, input from instructor and medical personnel
- Predict Soldier safety, well-being and performance
- Enable innovative physiologic research
- Enable advancements in Network Science

Overview of SPARNET System

Ranger Instructor accompanies students

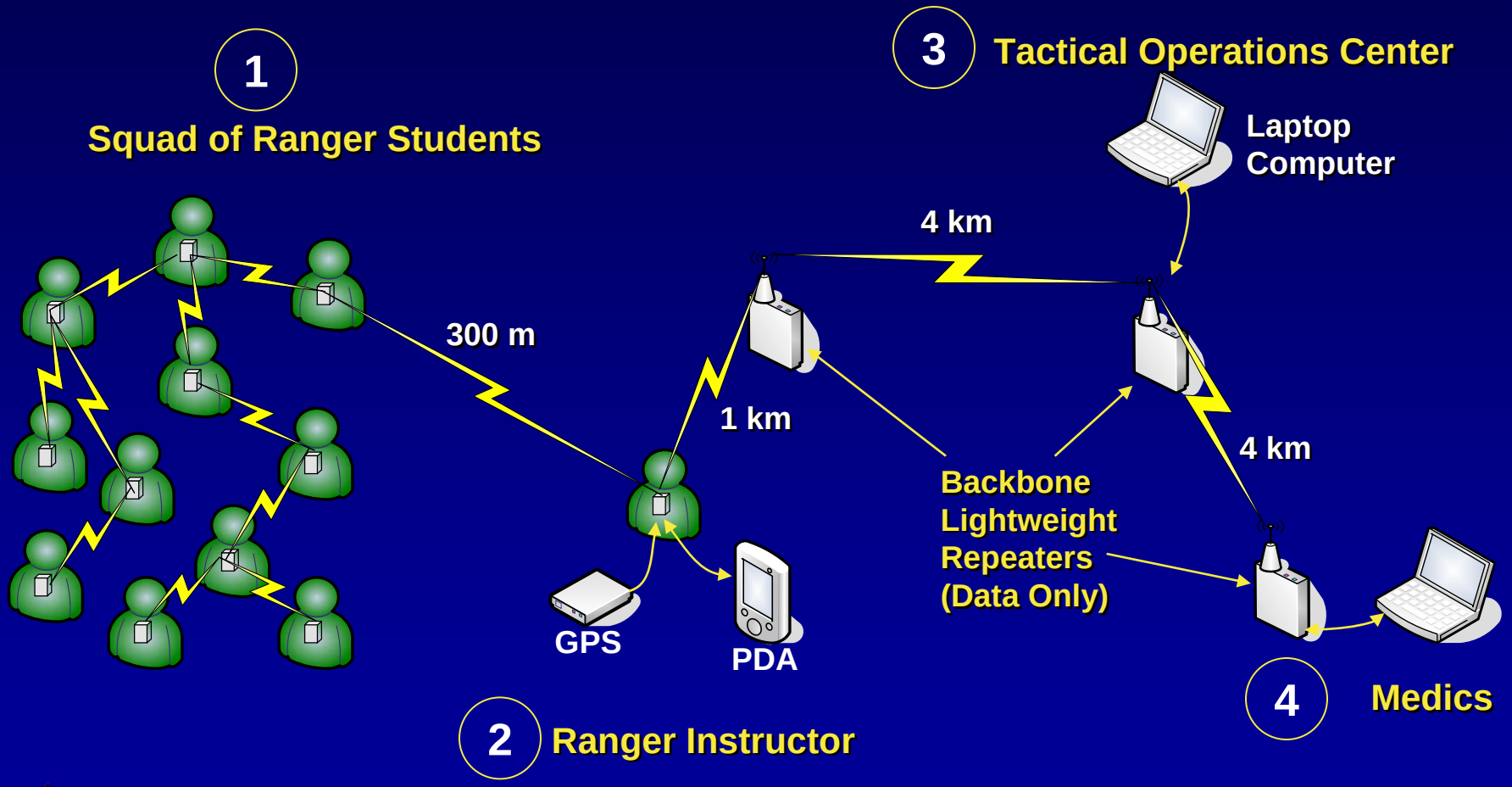

Flexible & Adaptable

- A purpose-built, “transparent” design: hardware and software
- A band-agile R.F. front-end with a programmable baseband platform to support a range of modulation types
- Leverages Software Defined Radio (SDR) technological approach to support “cognizant radio” capabilities

How a “Cognizant Radio” Helps

GOVERNMENT ALLOCATIONS:	FIXED, MOBILE, 1.	2.	FIXED, MOBILE, 3.
NON-GOVERNMENT ALLOCATIONS:		2.	3.
GENERAL UTILIZATION:	Military tactical and training communications including air traffic control (ATC).	2.	

225 328.6-335.4 400.05

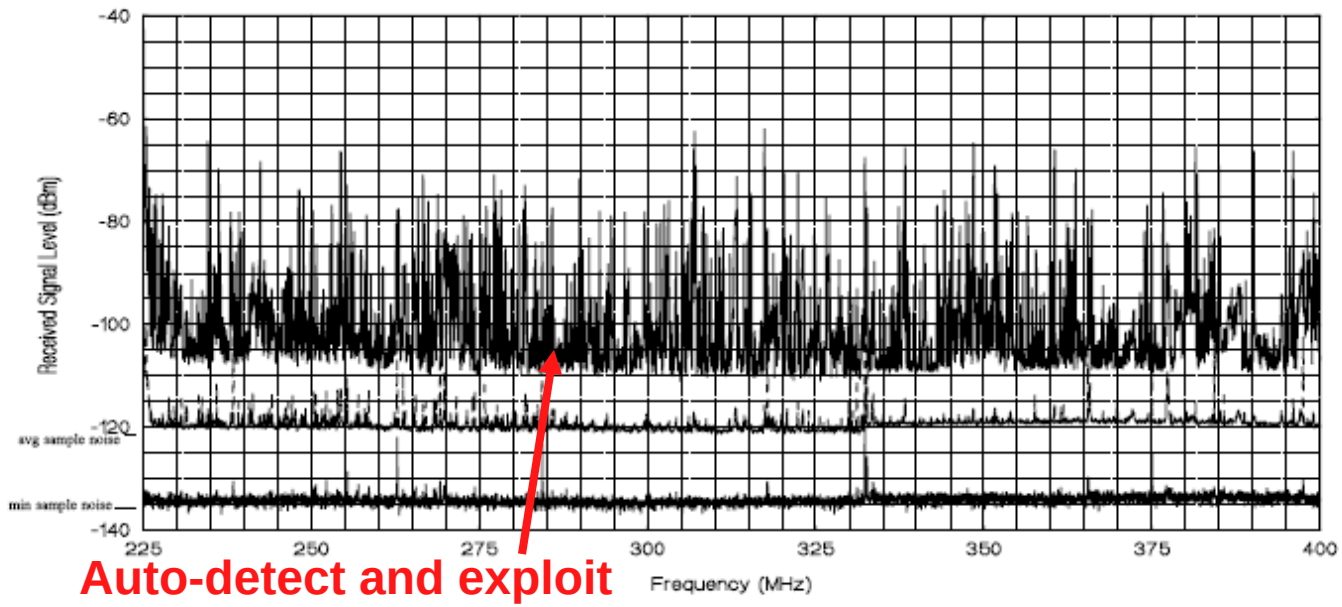

Auto-detect and exploit minimum-interference locations

1. Government usage is limited to military services; additionally, 235-322 MHz is allocated on a primary basis to the mobile-satellite service. 242.95-243.05 MHz is used for search and rescue operations including position-indicating radiobeacons.
2. AERONAUTICAL RADIONAVIGATION, instrument landing systems (ILS) only.
3. 399.9-400.05 MHz: RADIONAVIGATION-SATELLITE, MOBILE-SATELLITE (Earth-to-space).

Figure 9. NTIA spectrum survey graph summarizing 4,300 sweeps across the 225-400 MHz range (System-1, band event 15, swept/m3 algorithm, sample detector, 30-kHz bandwidth) at Los Angeles, CA, 1995.

SAN Radio and Antenna

- Software-Defined-Radio (SRD)
- Near-Field-Communication Hub (forms links to sensors)
- Enclosure, seal, circuit card assemblies, lower cover, batteries, battery cover
- Integrated connector assemblies (not shown)
- Engineering unit LxWxH: 6”x3.7”x1”

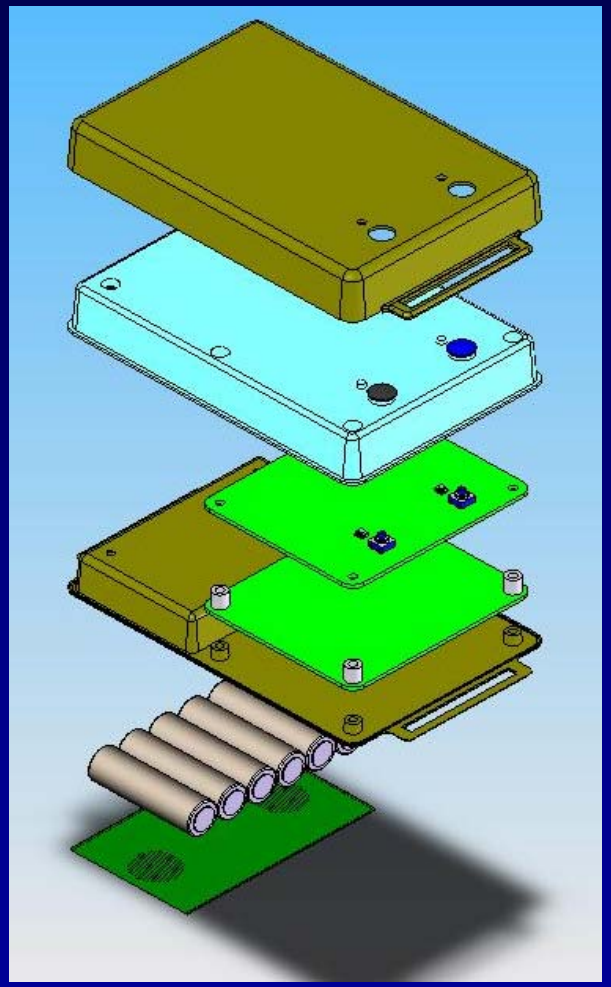

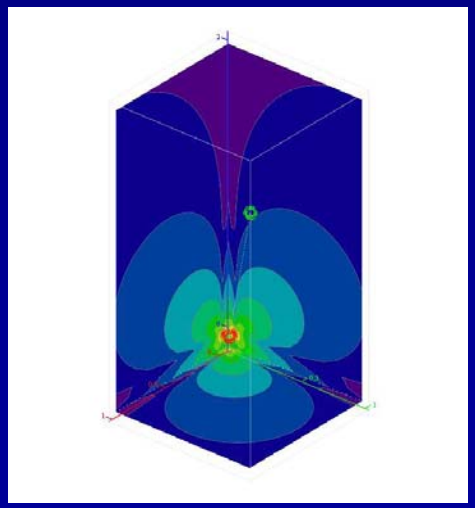

SAN Body-Worn Antenna

Front Position: Double Null

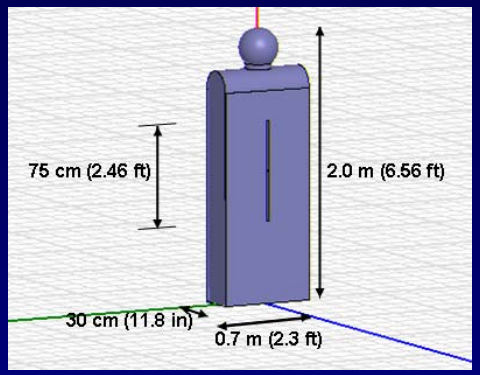

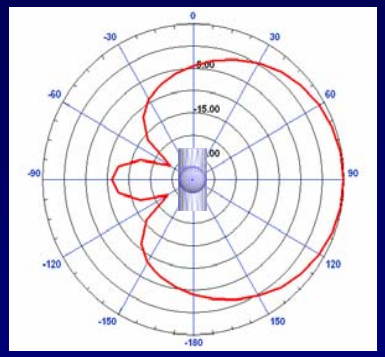

Shoulder Position: Reduced Nulls

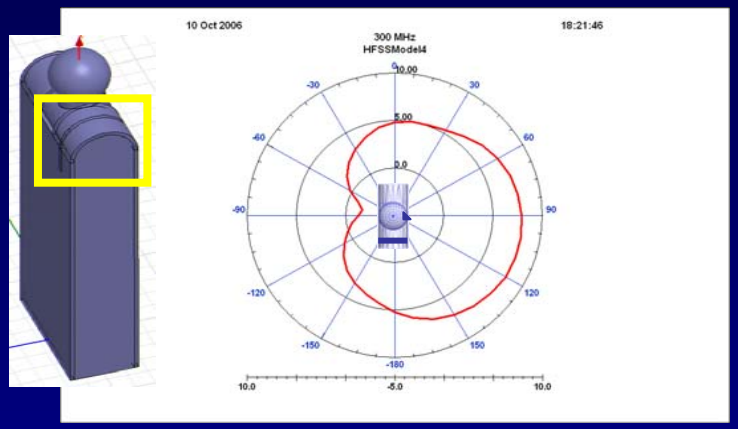

Risk-Reduction by Extensive Analysis, Modeling and Simulation

Angle Positioning

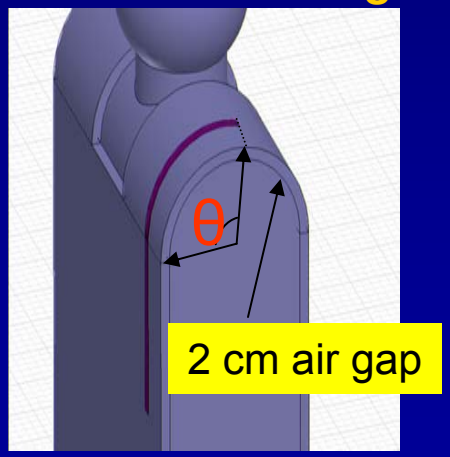

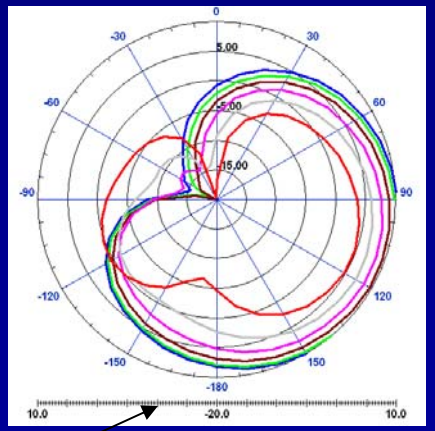

Best location: θ = 165°

Body Wearable Antennas (BWA)

RF Safety Testing of SPARNET OSU BWA

Specific Absorption Rate (SAR)

- Measure of human tissue heating due to energy absorption from nearby transmitting antenna
  - Primary Safety Concern For Body Wearable Antennas
- In-House SAR Laboratory can measure BWA located on helmet, torso, shoulder
- CERDEC conducting RF safety testing of body wearable Short-Range Comm Antenna developed by OSU in support of SPARNET Squad Communications

Flat Phantom Setup

Positioner and Probe

Positioner/Probe inside torso

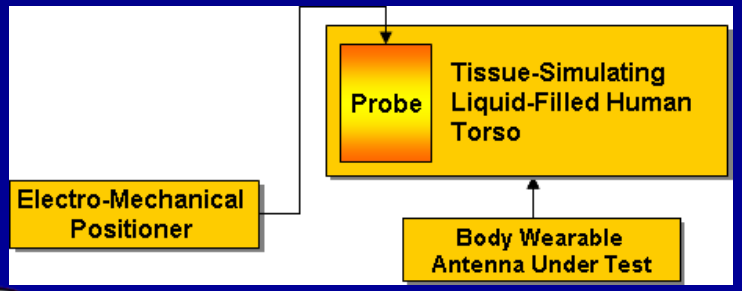

OSU Short Range Body Wearable Comm Antenna

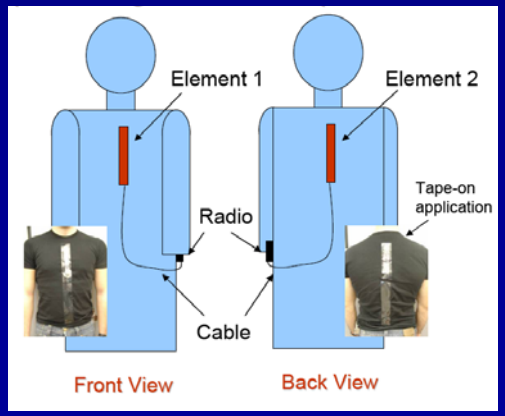

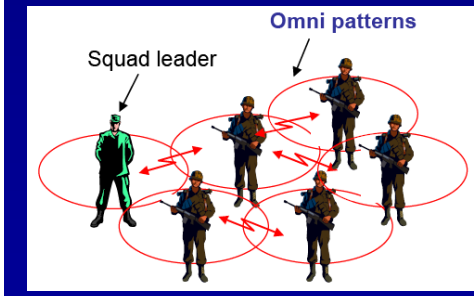

SPARNET-enabled Research Opportunities

- Dynamics of networked organizational behavior
- Properties of networks that promote simplicity and connectivity
- Enhanced network-centric mission effectiveness
- Advanced network-based sensor fusion
- Metabolic/biological networks – soldier performance enhancement
  - functional element = water and food
  - objective = maintain health and performance
  - threat = mismatched/interrupted supplies
  - operational implications = physical and psychological degradation, increased risk of DNBI

SPARNET IN SUMMARY…

- Risk-managed to address significant unmet needs
- Minimalist, adaptable, advanced technology
- Scalable and cost-effective
- Improves training effectiveness and safety
  - Situational and medical awareness
  - Casualty avoidance
  - Casualty management
- Enables innovative, cutting-edge physiologic research
- Enables cutting-edge Network Science research

Opinions, interpretations, conclusions, and recommendations contained herein are those of the author and are not necessarily endorsed by the U.S. Army